KHATOD®
OPTOELECTRONIC
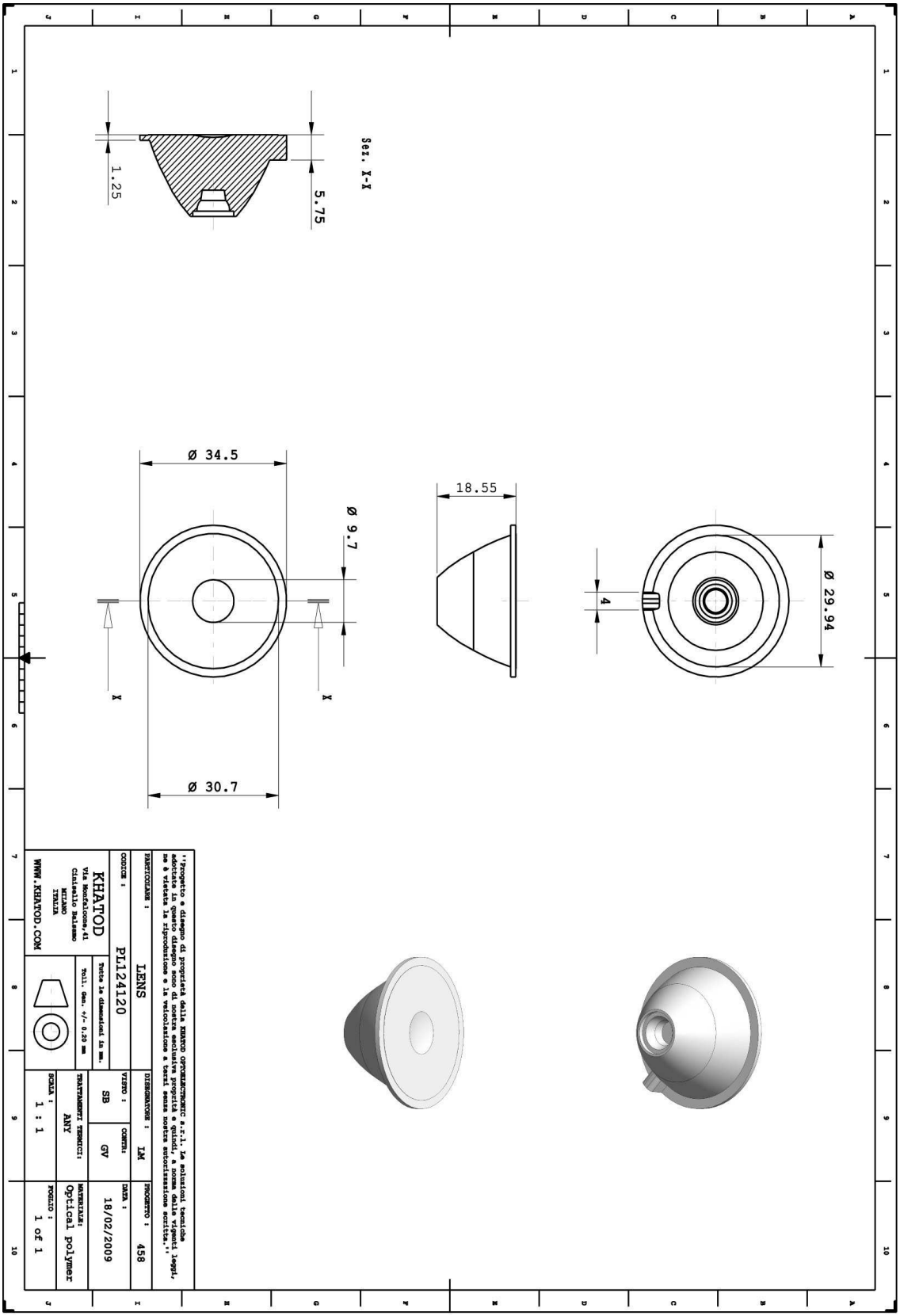
CODE NUMBER: 110000000098