Note:
- Dimensions in inches into brackets
- For missing dimensions see 3D file
- WHITE surfaces mirror polished
- BLUE surfaces embossed 27/28 VDI
- Ⓒ = Quality Control Dimensions (QCD)
- Gate removed by plotter laser.Sink mark injection will be present

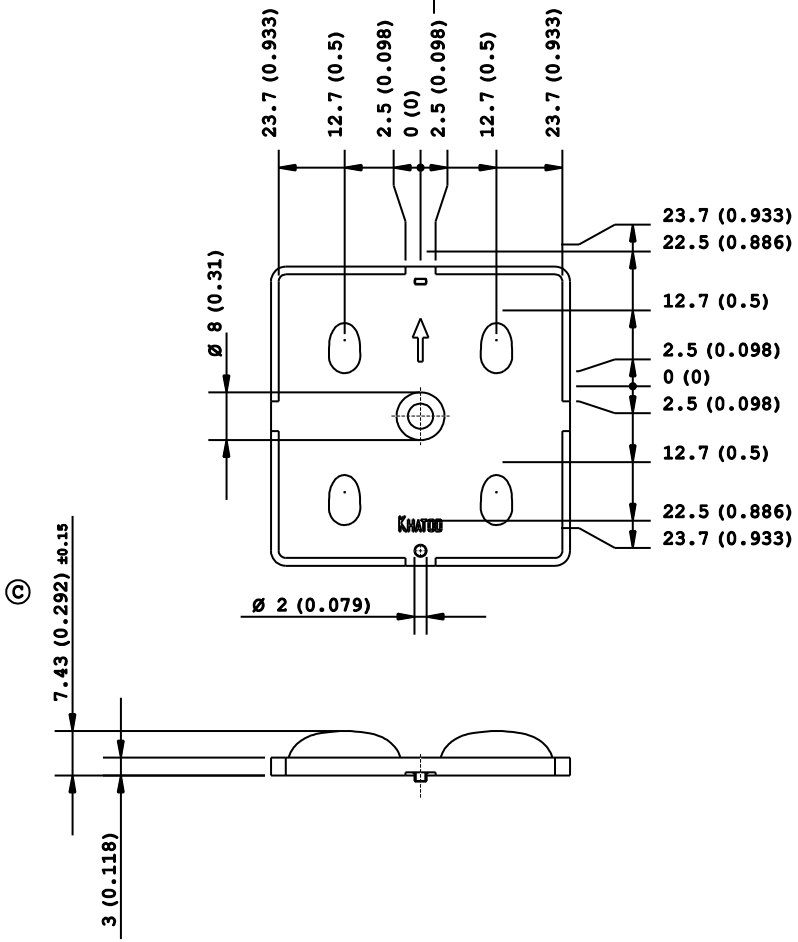

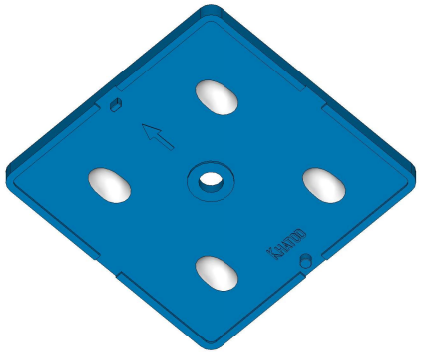

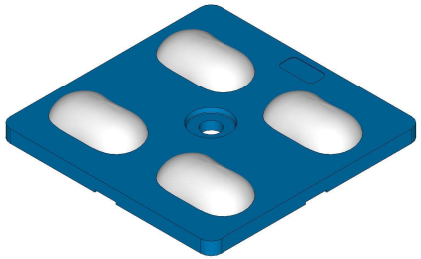

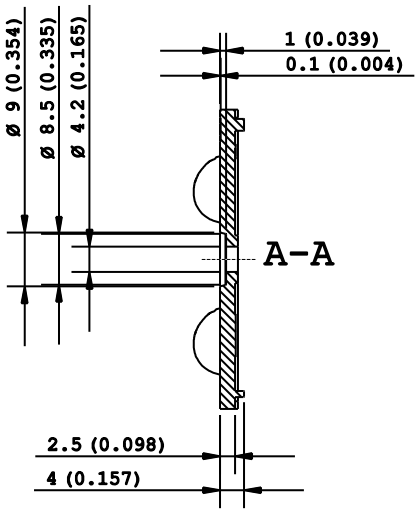

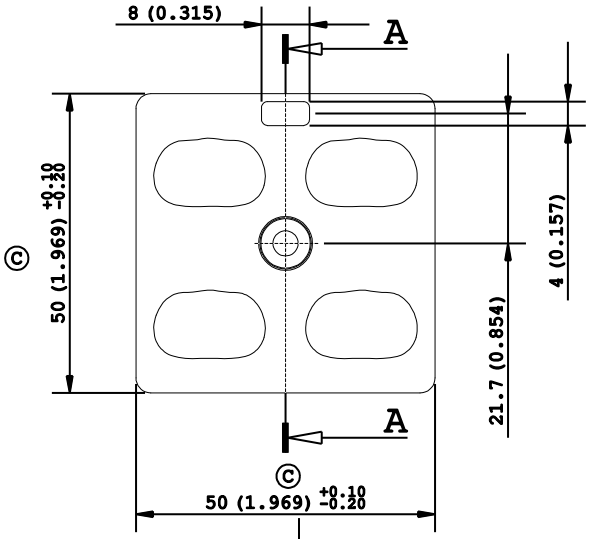

'' Project and design owned by Khatod OPTOELECTRONIC s. r. l.''
The technical solutions adopted in this design are Khatod intellectual property, they cannot be reproduced and trasmitted to third parties without our prior written permission.
Unauthorized disclosure of confidential proprietary information will be prosecuted by law.

DESCRIPTION : Lens module 4 array	DESIGNER : KR/LS		PROJECTS : NAC_04
CODE : KNAC 0424 ASM	CHECKED : LM	CONTROLLED: LM/LS	DATA : 18/06/2016
KHATOD Via Alessandrina,25 Cusano Milanino MILANO ITALIA WWW.KHATOD.COM	All Dimensions in mm General Tolerances +/-0.20 mm	HEAT TREATMENT: No One	MATERIAL: PMMA Clear
		SCALE : 1 : 1	SHEET : 1 of 1