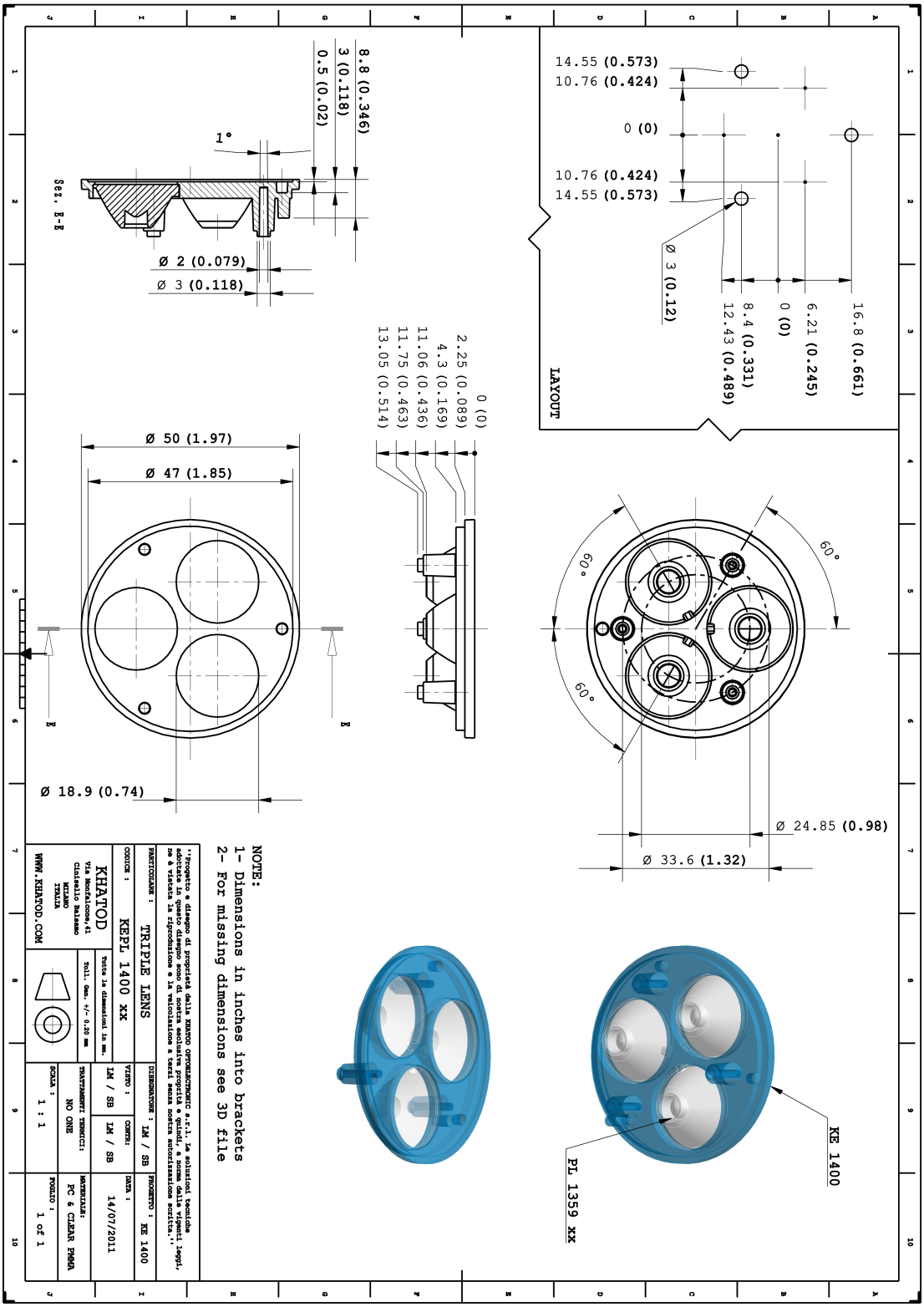
LAYOUT
16.8 (0.661)
6.21 (0.245)
0 (0)
8.4 (0.331)
12.43 (0.489)
14.55 (0.573)
10.76 (0.424)
0 (0)
10.76 (0.424)
14.55 (0.573)
Ø 3 (0.12)
60°
60°
60°
Ø 24.85 (0.98)
Ø 33.6 (1.32)
0 (0)
2.25 (0.089)
4.3 (0.169)
11.06 (0.436)
11.75 (0.463)
13.05 (0.514)
Ø 50 (1.97)
Ø 47 (1.85)
Ø 18.9 (0.74)
8.8 (0.346)
3 (0.118)
0.5 (0.02)
1°
Sez. E-E
Ø 2 (0.079)
Ø 3 (0.118)
NOTE:
1- Dimensions in inches into brackets
2- For missing dimensions see 3D file
KE 1400
PL 1359 XX
PARTICOLARE : TRIPLE LENS
CODICE : KEPL 1400 XX
KHATOD
Via Monfalcone,41
Cinisello Balsamo
MILANO
ITALIA
WWW.KHATOD.COM
Tutte le dimensioni in mm.
Toll. Gen. +/- 0.20 mm
DISEGNATORE : LM / SB
VISTO : LM / SB
CONTR: LM / SB
PROGETTO : KE 1400
DATA : 14/07/2011
TRATTAMENTI TERMICI: NO ONE
MATERIALE: PC & CLEAR PMMA
SCALA : 1 : 1
FOGLIO : 1 of 1